METER SET DESIGN

MICHAEL T. LEGITTINO
REGIONAL SALES MANAGER
WESTERN GAS TECHNOLOGIES

Introduction

Meter and regulator sets, particularly residential, are often seen as the "resume" of a gas utility. They are what the general consumer sees and recognizes as the "face" of the gas company. Despite our best efforts, the majority of the public is clueless in regards to all of the work that it takes to bring gas from the well to the burner tip. The public simply knows what they can see, and what they can see is typically what is stationed right outside their front door.

This paper will take us on a tour of the above ground distribution design of typical meter set assemblies. We will discuss the design and application of natural gas meters sets. As well as instruction of the revolution in meter set design and an insight into meter set design features that increase the fabrication effectiveness.

The interesting thing about meter set design is that there is virtually an unlimited amount of options for bringing gas out of the ground and into a customer's home or business. Every utility believes they have the "best design," yet no two companies ever do it the same. Various circumstances often dictate meter set design and for this reason we often end up resulting in an uncertain or odd look. Uniformity and standardization is the goal that we are striving for here today.

Basics

A service line, either steel or plastic (PE), is connected to the distribution systems main line. The service line is then connected to a meter riser, which is basically a transition fitting. This riser serves as a transition from the service line to a meter stop/valve/shutoff valve. The meter stop is connected to a short nipple that is connected to the regulator. It is at this point that the pressure is reduced from system pressure, typically 45 to 60 PSIG. The area before the regulator or the inlet is usually referred to as the "high pressure side. The outlet pressure typically being anywhere from 2PSI to a few inches W.C. This outlet is then piped to the meter connections - swivel/meter nut/gasket, whereby the meter is attached. The fuel line – also known as the customer line, connects into the house piping through a stub out where the pipe enters the building. All of these components can be individually pieced together (usually threaded) or can be pre-fabricated as essentially one set.

History

Generation 1 of gas meter set design typically refers to traditional field built units. In order to fabricate these meter set assemblies, gas companies used to purchase individual components of the meter set and construct their designs in the field environments. This unsurprisingly led to a wide variety of uncharacteristic sets. These designs were not only dependent on the field technician wrenching these components together, but also on the components that he had on hand. These would usually consist of a series of elbows, nipples and tees that would be fit together to try to come up with the most efficient design possible. Unfortunately, this was not necessarily the case.

Traditional field built sets created a lot of problems for gas companies over the years. As we mentioned above, there were almost always design inconsistencies. This most certainly created issues with maintenance. Due to the infinite number of connections, utilities struggled with joint leaks and leak control. Another factor that lacked control was field painting and corrosion control. Corrosion increased due to inconsistent and low quality coating specifications. Last, but certainly not least, there were incredible time and cost constraints associated with Generation 1 meter set assemblies. Technicians and servicemen had difficulty fabricating more than a few sets per day and the costs associated with these constraints were quite high. As customer acquisitions grew the supply and demand economics for field built sets became unproductive.

As time progressed, many gas companies looked to address this lack of productivity. Utilities began to transition from Generation 1 of field built sets to Generation 2. Generation 2 is the period of meter shop assembly. These results seemed positive at the start. They reduced field installation time by having full time employees building consistent meter sets on a daily basis. Bringing the assembly to a meter shop also allowed the gas company to standardize on a common design that they could consistently take to the field. This consistency improved maintenance and overall meter set performance. Being that these were assembled in a shop environment, it allowed utilities to conduct leak testing and implement strategies to provide corrosion control.

Though Generation 2 seemed to have moved utilities in the right direction there were still issues surrounding the meter set design being done in the meter shop. Overhead costs were still massive.

More management was required to oversee these fabrications. This initiative created more part numbers to be created and an inventory management nightmare. Additionally, corrosion control still suffered due to lack of high quality paint booths and quality control. Due to these circumstances, it was time for utilities to transition to Generation 3.

Generation 3 in the timeline of meter set design typically covers the transition from meter shop fabrication to outside fabricators. Many of the issues associated with Generation 2 were able to be overcome by allowing fabricators to do the work. The most beneficial aspect of this process is the reduction in the cost of assembly. Utility overhead costs dropped due to less inventory and stock keeping units. Inventory reduction can be credited to the meter sets as a whole. The reduction in regulators, pipe nipples, elbows, strainers, and meter nuts are a few of the many component pieces that don't need to be tracked as frequently. The ability for negotiations and purchasing power allowed for utilities to reduce the cost associated with their meter sets, especially when high volumes were ordered. This development also allowed for increased standards and specifications associated with thread quality coatings, design and development.

Having outside fabricators control this work allowed for utilities to accept turnkey solutions and drastically decrease installation time. This addition also allowed for utilities to take advantage of outside manufacturer's quality control. Some of the most important aspects discussed above were able to be implemented into these turnkey kits. High quality threads as well as corrosion resistant coatings were able to be added to these designs. Manufacturers were able to incorporate their quality control initiatives in order to improve the quality of their threads and paint specifications. The quality and efficiency of designs also benefitted greatly from this initiative. Utilities are constantly under a microscope to eliminate as

many connections as possible. The capabilities of the manufacturers allowed for the introduction of coined fittings, bent meter ells and meter loops, as well as an increased number of welded connections. In the end, this eliminates maintenance costs and field visits. This investment in generation 3, where we are today, has allowed utilities to drastically improve the quality of their distribution systems, as well as keep up with the volume and growth that all are experiencing.

Industry Specifications and Requirements

There are some general industry guidelines that regulators require the gas utilities to meet regarding to their meter sets. For the most part, utilities are free to design their sets however they feel most comfortable. This allows the gas companies the flexibility in design, application and structure. Most of the regulations and requirements surrounding meter sets have to do with the clearance distance codes and specifications. Many of these are provided under standards from the

American Gas Association. These may differ from state to state, but generally they are agreed upon as an industry.

Finding a location for where to install a meter set can often be problematic. It is important to pick a location that does not present access problems or exposes the meter set to accidental damages. For instance, it is recommended to place the sets away from public passageways, stairs or walkways. Also, to avoid additional piping and maintenance issues, it's recommended to place them away from unventilated, confined or inaccessible places. There are regulations requiring MSA's to be at least 3 feet from ignition sources such as furnaces, water heaters or electrical outlets and 10 feet away from any building air intake systems due to relief vents on regulators. In addition to these regulations it is advisable to avoid vehicular driveways and rooftops. These regulations all must be taken into account, all the while remaining as close as possible to the source of gas supply.

Thread Quality

Another major component that the manufacturers have a lot of control over is the quality of threads that are being produced. In our industry, it is common knowledge that the least amount of connections the better. Though we try to eliminate as many connections as possible, we are still forced to use many threaded connections in building a residential or commercial meter set.

Multiple industry specifications discuss the screw thread connections used in our industry. The primary specification is ANSI B1.20.1. Manufacturers can control the quality of the threads you are receiving through intensive manufacturing and inspection practices. These practices allow utilities to mitigate leaks and unforeseen maintenance issues. NPT, ANPT and CTT threads are all common in the industry. Having a manufacturer inspecting and quality controlling these components allows for the gas companies to focus on their responsibilities with the end users.

Corrosion Control

Over time, coatings for these above ground service components became a much bigger factor as corrosion and integrity took a higher precedence at the utility level. As time has gone on, coatings have evolved from a standard ASA 49 Grey paint, to an ability to have numerous coatings on a single meter set assembly that serve multiple purposes. Old coatings were environmentally unsafe and contained fast drying enamels that were loaded with drying agents. Over time these coatings would become affected by sunlight and water and corrosion would set in.

Today, coatings have evolved into a complex science and manufacturers and utilities alike realize their value. Manufacturers begin by

pretreating the pipe they are working with. Often sand blasting and applying a zinc chromate plating to the pipe. Zinc chromate plating is a similar process to galvanizing and provides corrosion resistance to areas that have been reconfigured (threads). After a zinc coating process is completed, additional coating options are possible. Customers can request epoxy primers to add oxidation resistance and a solid blanket for top coatings to adhere. Top coats can include a variety of different options of powder coats. Powder coats provide a harder finish than conventional paint and are cured under heat in order to provide a tougher, more corrosion resistant coating. As a final layer of protection, another cover that can be provided is a urethane top coat that provides UV protection from constant sunlight. All in all, different climates and locations call for a variety of different coatings. Figuring out which coating combination best fits the application will provide the longest, most reliable service life for the meter set assembly.

Design

For the sake of this presentation we will focus on common design features and benefits for residential, commercial and industrial applications. This will primarily encompass diaphragm and rotary meter set assemblies since these cover most applications.

Our goals in meter set design primarily focus on the action of increasing efficiency. In this, we want to completely eliminate meter set variances. This means creating a standard that we can use in just about any configuration of a given meter size. Also, we want to reduce pipeline integrity maintenance responsibility. Higher quality meter sets will allow for less field work and reduced maintenance costs. We also want to maintain high level of deliverability standards, as well as be adaptable to load variances as they occur. Obviously things are constantly changing in our industry and we need to be able to adapt and adjust on the fly. Designing meter sets that will allow us to quickly replace or reconfigure existing sets will benefit us down the line. Last but not least, we want to be able to provide design choices to external allies, builders and contractors who we routinely work with. We all want to present something that is going to be visually appealing to the end customer. Through these goals and objectives, we can create meter sets that are high quality, effective and appealing.

There are going to be a few factors that decide the main characteristics of a design. The main component of a meter set assembly that is dictated by these design factors is the meter itself. Sizing a meter is dependent on a few factors. The maximum allowable inlet and outlet pressures, as well as the normal operating pressures are few of them. What is the maximum inlet pressure this meter could ever see? What is the downstream regulated pressure that was promised to the customer? What is the normal operating pressure that the meter set will see? Another important question for sizing a meter is knowing what the total connected load is going to be. How many BTU's need to be provided? What type of equipment is the customer working

with? Is there a potential for growth and a larger connected load? These are all important questions for sizing the meter and putting in the correct meter set for the job. It is also important to note gas quality and the type of meter that you will be using. If the quality of the gas is dirty, or the customer requires a rotary meter, additional components like a strainer may be required. All of these factors and questions are critical in making sure the right set is used for the job.

Residential Applications

While most residential meter set assemblies typically consist of the 250 acfh capacity diaphragm type meters, diaphragm meters with capacities of 400, 600, 800 acfh, and larger have become more common for larger homes. Under most conditions these sets measure gas at or near a base condition of 7" w.c. These meter sets are usually quite simple in design and the components needed are usually quite minimal.

In these designs, we want to avoid a lack of rigidity. We want structure and standardization. At all costs we want to provide sets that are not "job framed" at the technicians discretion. This discretion is what leads to maintenance issues and additional work. Another scenario we want to move away from are wide and expansive assembly footprints. In order to do this, we want to make sure to design an inlet standard. Finding an inlet design that can work on any 250/400/630 acfh application is going to drastically benefit inventory/ maintenance costs / installation costs and visual appeal.

On the inlet side of the meter there are a few components that are always going to be required in a residential diaphragm meter set. Coming off of the riser, we will need a valve in order to have the ability to shut off flow. From this valve, we will then transition into a regulator that is sized for the application. From the outlet of the regulator is where we make our connection to the meter. This can be done through a one piece meter bend or meter loop. This meter loop is designed to eliminate connections between pipe nipples and fittings, all the while creating a top inlet to connect to the meter nut to inlet swivel of the diaphragm meter.

Below are a few examples of standardized meter set inlet assemblies. The inlet design is identical in both examples. The outlet side can change depending on location or access to the building.

It is important to note that the gas company should control their own facilities. Utilities should control what they are in charge of. Once you reach the outlet of the meter, the customer houseline is the point in which distance and design can be reconfigured. The picture below shows how this meter set is standardized on the gas company facilities, changed and adapted to meet the customers' requirements.

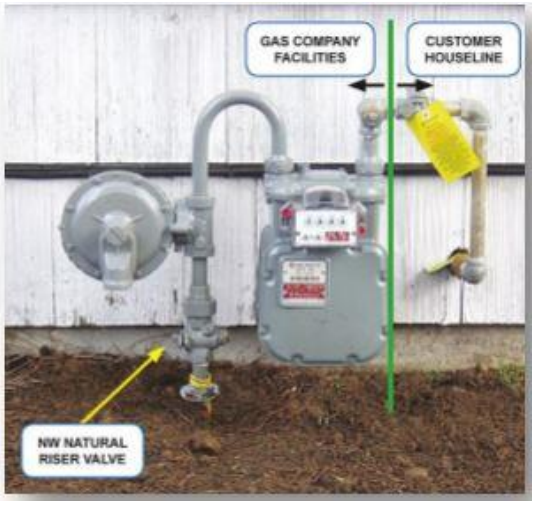

Another option on smaller diaphragm meter sets is the ability to use a meter bar. Meter bars give the gas company a fixed distance between the meter swivels and the addition of test plugs in order to get downstream regulated pressure readings. These options are quite popular, as they give customers the option to do more meter set maintenance should they choose. Below is an example of a meter set with a meter bar.

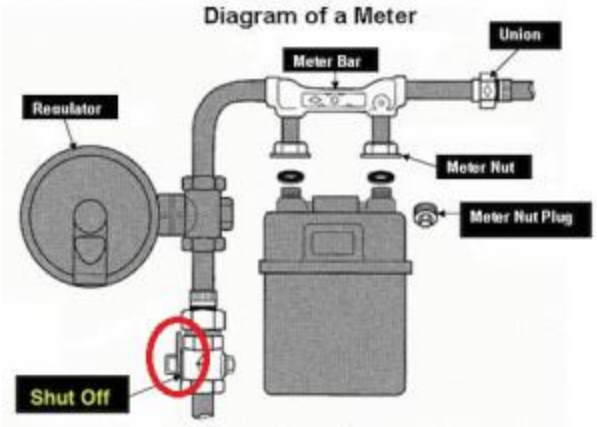

Any way you look at it, a quality design will allow the gas company to have the long term consistency needed for long term cost control. The design for residential meters are usually quite simple, but keeping them consistent can truly help the perception of the gas company.

Commercial Applications

Commercial applications for gas distribution often closely relate to those of the residential applications previously discussed. The primary similarity between the two is the expanded use of diaphragm meters. Being that diaphragm meters are used in both applications, similar meter set design can be used. Typically, commercial applications can be categorized by diaphragm meters running from 400 to 1000 acfh class meters. Commercial meter sets can often get up to 2" pipe size or Sprague #5 meter connections. Larger pipe size, regulators and meters are required for the larger capacities required by the customer.

Below is a simple design, similar in application to the 250 class residential meter set discussed earlier. The design below happens to be for a 1000 class commercial set. As you can see, the inlet stays consistent and the outlet is adjusted to meet the requirements of the customer.

Another feature often used in commercial meter sets are bypasses. Bypasses are used because commercial customers often require larger amounts of gas. Bypasses allow for utilities to work on a meter set and possibly remove the meter from service, without having to stop feeding gas to the customer. These bypasses use a series of valves to control the direction of flow throughout a meter set. These allow for maintenance simplicity and easy meter changes.

Below are a few examples of commercial meter sets with bypass options. These bypasses can come equipped with threaded or welded valves to eliminate potential leak points.

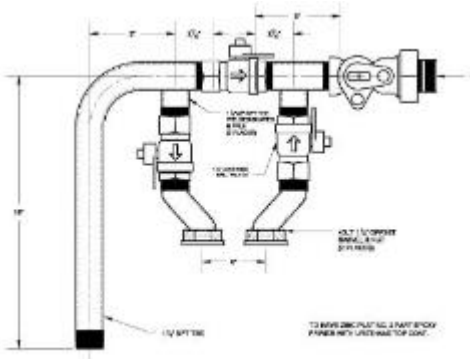

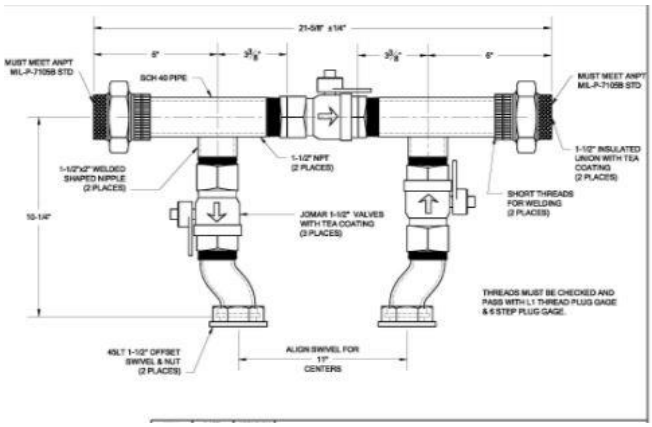

As you can see these commercial meter sets can come in many different shapes and sizes. You can add strainers, hard bypasses, soft bypasses, test/pressure ports and much more. All of these options can help produce higher efficiency in a company's DIMP projects.

Industrial Applications

Once standards are set for residential and commercial applications, utilities can expand on their meter set design for common industrial sets. Typically, industrial meter sets have gas flows requiring anywhere from 2M rotary meters to 23M rotary meters. These can also vary in pressure up 60 or 100 PSIG. The major deciding factor in these sets is the total connected load needed by the customer. The load will decide the approximate meter size, regulator size and associated piping. Rotary meter sets can be designed in a variety of different options. You can have the meter in a top inlet orientation, or a side inlet orientation. You can utilize hard bypass options, or soft bypass options depending on your companies meter testing practices. Whatever your needs are, industrial meter sets can be configured to meet any application. It is important to mention that yet again, utilities should control what they can control in their facilities. Distance and reconfiguration can

be adjusted downstream of the standardized components.

Most industrial meter sets require the same or similar components to residential and commercial sets, just configured differently. Industrial sets may include additional filters and strainers, more test ports and the incorporation of flanges or welded connections, rather than threaded connections. No matter how these industrial, rotary meter sets are configured, they all provide the same benefits, measuring and regulating flow.

Often due to the overall size of industrial meter sets, these can be manufactured as a series of spool pieces. Spools are short segments of pipe/components that can be fit together through the connection of flanges. These individual spools containing multiple parts can be inventoried in the warehouses as single components. As a meter set is required, technicians can grab the necessary spools in order to construct the meter set. This is essentially constructing the meter set as a puzzle using prefabricated parts. This is quite often a solution for these industrial sets due to the weight and size of the complete assembly.

Many rotary meter manufacturers specify a preferred configuration for their meters. Due to the fact that the rotary meters used in industrial applications are finely tuned measuring devices with incredibly tight tolerances, they need to be protected. Upstream filters or strainers are recommended in order to protect the rotary meters from large pipeline debris, dirt, rust or liquids. It is also recommended that the meters be located high in the pipe set to allow gravity to knock out much of the debris and liquids. Another preferred practice is to have the meter placed in a top inlet orientation. This set-up can allow debris to fall through the meter without damaging the impellers. Outside of these simple recommendations, utilities have the choice to configure these designs however they please.

To begin with, the below design offers a solution for a top inlet orientation with the ability to install a soft bypass hose. During meter testing, a high pressure hose can be installed and the meter can be bypassed. This configuration incorporates a large y-type strainer, a flange by flange regulator and a large welded meter loop. This configuration can be completely assembled in the field through a series of flanges.

The option above requires warehouses to inventory a limited number of components that can then be pieced together efficiently upon field installation. It should also be noted that the outlet design allows for downstream piping to be configured however it needs.

Another potential option for industrial meter sets allows the meter to be placed in a side inlet orientation and utilizes a hard, permanent bypass. This formation can allow meters to be tested in the field without having to attach any external piping or remove the meter from service. The permanent bypass in this example includes an additional regulator to make sure the customer is receiving the pressures they were promised.

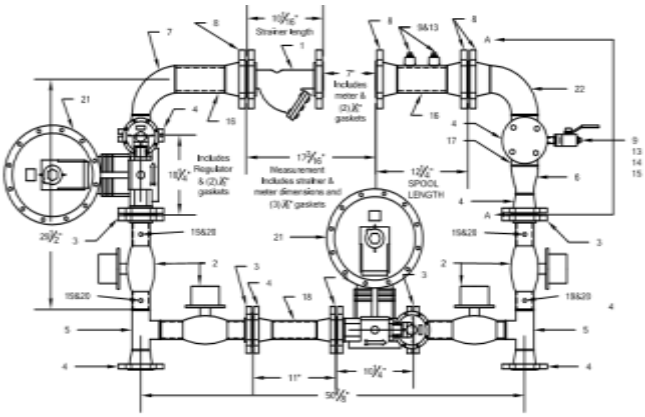

It should be noted that the above example would be constructed from a series of individual spool pieces. Outside of the flanged connections on this design, all other component parts are welded. This feature eliminates potential leak points and maintenance issues.

Industrial meter sets can offer a unique set of features to utility servicemen. These sets often have meters and regulators that require the most attention. A meter set that allows servicemen to work on any application efficiently will greatly benefit the company. Industrial customers are important to any utility and designing an efficient and easy to maintain set will prolong the life of the meter, as well as the overall quality of service provided to the end-user.

Multi-meter manifolds

Multi-unit residential and commercial applications are often situations that cause engineers the biggest headaches. These systems can become incredibly complicated. Whatever system needs to be designed, it is recommended to stay with the mindset of minimal connections. The less connections that are made, the better. This will eliminate potential leak points and keep consistent operations. Depending on the applications, multi-meter manifolds can run anywhere from holding 2 meters to 10 meters, all controlled at a single point of regulation. These complex designs are often difficult to install and maintain.

One of the major issues with multi meter manifolds is that often times utilities are confined to a small space to put the entirety of the meter set. Depending on the situation long/horizontal meter sets may be required, or tall vertical sets may be necessary. Unfortunately these situations often need to be decided on a case by case basis. For this reason, it is advisable to have standard design options for either configuration.

Above is an example of one possibility. This option is a residential 2 tier header equipped with meter inlet valves to stop flow to certain customers. This option is compact in design and is regulated at a single point.

Another example is for a commercial setting. This example happens to be a single tier, but also includes inlet shut off valves and a compact design.

These examples are all controlled through the inlet regulation assemblies that feeds the gas to the headers. This example assembly can be configured to different sizes to work with different loads and pressure classes.

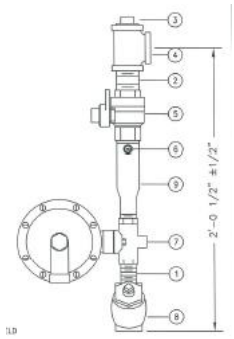

Figuring out commonalities between various multi meter applications will allow gas companies to find standard designs and adjust accordingly when extraneous circumstances arise.

How We Do It

Though the undertaking of creating standard designs and implementing these new options into your system may be arduous, it will prevent issues down the line. This undertaking can be done by consistently using industry standard parts within assemblies wherever possible. Sticking with parts that are common will allow the utility to make sure they have the inventory that they need at all times. It will also be important to make smart inventory choices. It is not necessary to use every meter or regulator size available. Standardizing on sizes that can be used in multiple applications will greatly increase the financial standing of the gas company. Also, it is important to utilize the other companies in the industry to see how they are designing their meter sets. Properly conducting research and development will allow your gas company to find the best designs to fit your needs and preferences. Lastly, by moving towards pre-assembly, pre-testing and pre-coating we can drastically decrease installation, operation and maintenance costs. Is it worth some small costs up front to save yourself large costs down the line?

Conclusion

Designing and developing standard meter set assemblies will prove to be incredibly beneficial to any gas company. The options and strategies that are available for this are just about endless. Developing standards that will work in the majority of applications will allow the gas company to provide higher quality service to their customer, all the while being more efficient and financially responsible. Moving your business in the direction of meter set standardization will provide immeasurable cost savings through set time labor reductions, maintenance costs and inventory control. Minimizing these costs at a utilities field level will allow for more system upgrades and a safer, more reliable system.

The options and strategies for designing these meter sets are numerous. It is advised to take a deep dive into current practices in order to find designs that will make for a seamless transision. Take advantage of allies in the industry and ask questions about how they design meter sets. Take the time to see what ideas and practices work for them and how they feel you can improve. Ask your field servicemen how they feel processes and designs can be improved. Last but not least, certainly take advantage of your outside manufacturers who can provide you with popular industry trends in this arena. Combining all the available information in meter set design will allow gas companies to improve their system and enhance their “resume” in the eyes of the consumer.